SOME SIMPLE INEXPENSIVE METHODS FOR DETECTION OF RADIOACTIVITY*

Training Citizens to Meet Possible Atomic Disaster

OTTO GLASSER, Ph. D.
Department of Biophysics

THE recent article by Lauritsen and Lauritsen[1] describing a "radiation meter for disaster use" is a timely and valuable contribution. These authors call attention to the serious danger to body and mind of civilians who have no training or knowledge of radioactivity and are totally unprepared to meet the dangers of an attack by an atomic bomb or other military use of radioactive materials. They describe a small, relatively simple radiation meter based upon the principle of ionization in air, and calibrated in fractions of one roentgen; they suggest wide distribution of such an instrument for general use in the event of disaster.

Everyone who is acquainted with or has worked in the field of protection against undesirable radiations will be in complete agreement with the Lauritsens when they stress the necessity for large-scale use of their instrument or of one of the various protective devices recently developed in other institutions.

Although there are at present numerous articles and books[2] on health monitoring for those exposed to radiations, and these publications describe in great detail all kinds of Geiger counters, ionization survey meters, pocket ionization chambers and film badges, still the average citizen has not been given any satisfactory instruction nor any economical means of making even rough observations regarding the presence of radioactivity, in case of attack.

At present, there is even a shortage of indicating devices in the hands of organized civilian defense authorities. In the event of any kind of attack with radioactive substances, there would be only a small handful of trained persons able to estimate or evaluate the extent of contamination on which to base proper measures of reassurance to the public or orders for evacuation. The burden on these few persons would be so enormous that there almost certainly would be delay in obtaining information in certain localities; such delay might lead to unnecessary fear and even panic, or it might, on the other hand, postpone the necessary treatment for some exposed to dangerous quantities of radiation.

In view of the foregoing, it would seem extremely important that the subject of detection of radioactivity be reduced to its simplest terms and explained to the general public, and that simple, inexpensive means of estimating roughly the quantity of radiation present be available in every home. The instruments developed for detecting and measuring radiations have been refined to such

**This paper was originally submitted for publication September 25, 1950*

Downloaded from www.ccjm.org on August 4, 2025. For personal use only. All other uses require permission.

an extent and have become so complex that we sometimes lose sight of the fact that these devices are based on simple principles that can be made understandable to any person of normal intelligence through the use of simple apparatus.

Ever since the discovery of x-rays and of radioactive substances, the principal methods for the detection and measurement of radiations have been based on their effect on photographic film, their effect on fluorescent substances and their ionizing effect on air.[3] These effects constitute the foundation of the whole science of radiology and its practical applications, and the methods based on them are in constant use. The use of x-rays in diagnosis depends entirely on the effect of these radiations on photographic film and the fluorescent screen, and the use of both x-rays and radioactive substances, both natural and artificial, is based on their ionizing effect in tissues.

These three methods, the photographic, the fluorescent and the ionization, or any one of them, may be used in simple ways important in training the average citizen to detect radiations at a nominal cost.

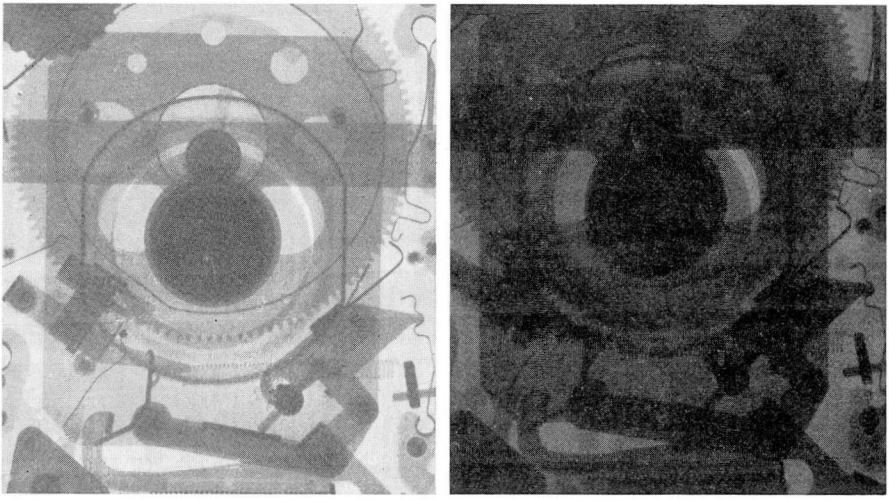

(a) (b)

FIG. 1. (a) Exposure to 4 roentgens (x-ray) of photosensitive paper in the Land Polaroid Camera, with camera shutter closed. (b) Exposure to 1 roentgen (x-ray) of photosensitive paper in the Land Polaroid Camera, with camera shutter closed.

Photographic Method. Every person who has a photographic camera of any kind has a radiation detector in the film. If there is any reason to suspect the presence of ionizing radiation, development of the film would confirm or disprove this. Just at present, this might not be the most practicable method because it would involve some delay while the film is being developed; but research has already been reported[4] on developer solutions which are simple to use and produce speedy results. If a film, after development, is clear, this

Downloaded from www.ccjm.org on August 4, 2025. For personal use only. All other uses require permission.

would be assuring proof that no radioactivity is present. If the film is gray, this should arouse suspicion of radioactivity, and if the film is dark the presence of a dangerous quantity of radiation is indicated.

The most practicable and rapid photographic method for emergency conditions would be through use of the Land Polaroid camera which includes its own developing system producing a finished picture one minute after exposure. Since with this camera a positive image is obtained direct on the sensitized paper—in contrast to the negative image obtained on ordinary photographic film—the effect of radiation, or the lack of it, is exactly the opposite of that seen on film. That is, if the picture is black, there is no radiation. With a small exposure, the picture is dark, and with a larger exposure to radiation, much lighter. A completely white picture would indicate a large quantity of radioactivity. Figure 1 shows the effect on this polaroid paper of an exposure of 4 roentgens(a) and 1 roentgen(b) (of x-rays), giving a picture of the shutter of the camera. The radiation beam was focused through the shutter, with the shutter closed, for sufficient time to yield the quantities of 4 and 1 r. An exposure of 0.3 roentgen, which is recognized as the maximal permissible dose per week for those working with radioactivity, produces a barely visible outline of the shutter on the dark paper.

The rolls of photosensitive paper used in this type of camera are now available in every photographic and many drug stores. This material could be adapted as a radiation detector without use of the camera. All that would be necessary would be a small box of plastic, wood or metal in which the paper could be pressed flat between the surfaces of the container. If such a device were developed for use in detecting radiations, the sensitive paper probably also could be made available in a flat pack, instead of a roll, which would be more convenient for this purpose. It should be possible also to prepare a chart with which the exposed paper could be compared, to show the lightening effect of various quantities of radiation for different times of exposure.

Fluorescent Method. A simple detection instrument for radiation utilizing the effect on fluorescent materials has been used ever since the discovery of the x-rays. This is a small fluoroscope, such as is illustrated in Figure 2. It can be made easily by anyone inclined to do so, and it could be manufactured in quantity inexpensively. The instrument consists of a tube of metal or other material, open at one end, and closed at the other with a piece of fluorescent screen. (This is manufactured by the Dupont-Patterson Screen Company and may be bought for about 40 cents per square inch.) This end is pointed at the site suspected of radioactivity; if radiations are present, they will cause fluorescence easily visible from the other end in the dark interior of the tube. To enhance the usefulness of this instrument, a small radium-paint button, sold in variety stores for 10 cents, can be fastened in the center of the screen and its light compared with the fluorescent light produced upon the screen by radiation, to get a rough estimate of relative quantity. Small strips of aluminum or copper foil placed on the screen (fig. 2, B and D) permit some estimate of the penetrating power of the radiation being investigated. More elaborate hand fluoroscopes can be obtained from firms handling x-ray equipment.

Downloaded from www.ccjm.org on August 4, 2025. For personal use only. All other uses require permission.

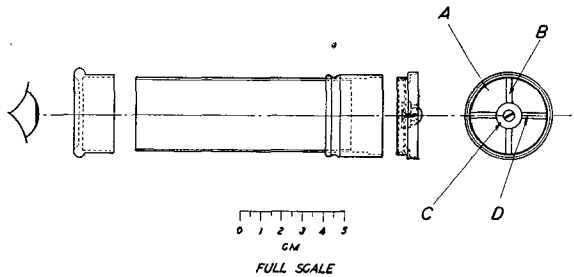

FIG. 2. Diagram of construction of a simple fluoroscope. (A) Fluorescent material (Dupont-Patterson Screen B). (B) Aluminum foil strip. (C) Button with radium-paint. (D) Copper foil strip.

Ionization Method. The instrument recently described by the Lauritsens,[1] like all other ionization instruments, is based upon the principle of the old gold-leaf electroscope. A homemade gold-leaf electroscope can easily be constructed from a bottle or can, a sulfur stopper and a rod carrying a gold leaf (fig. 3), for a total cost of less than a dollar. However, there are also gold-leaf electroscopes on the market which are inexpensive. A simple model is available for $1.35 and one with an improved metal container which can be sealed against moisture for $2.40, from the Central Scientific Company, Chicago. With the addition of a friction rod for charging the instrument, the investment for a rather satisfactory radiation detector is less than $3.00.

Such an instrument could be placed in every home and school room. It would have to be charged every morning or evening, but this would be no more of a burden than the daily winding of a watch or clock. Under normal conditions, the gold leaves would drop or discharge slowly as the result of the weak ionizing effects of natural radioactivity or cosmic radiation. Any quick or sudden discharge would spell danger, for it would indicate ionization from much stronger radiations. This simple electroscope could even be roughly calibrated to indicate the speed of fall of the gold leaves for any dangerous quantity of radiation. This kind of detector would be particularly useful in case of the dispersal of radioactive materials without a bomb explosion.

Comment. Whether we like it or not, it would appear that the atomic age is here to stay, and it is high time that some of the simple facts regarding radioactive substances and ionizing radiations and their effects become known to the average citizen in a way that will enable him to protect himself insofar as possible from the dangers they present. Hitherto, the detection of radiation and its measurement has been the special province of a small group of radiologists and physicists, and so far as the general public is concerned, has been regarded as something in the realm of the unknown and unknowable.

As one who has been closely connected with the handling and study of roentgen rays, radium, radon and artificially radioactive isotopes[5] for 35 years, I am gravely concerned with the present lack of any simple instruction on protection for the average citizen, and with the lack of any kind of indicator

Downloaded from www.ccjm.org on August 4, 2025. For personal use only. All other uses require permission.

for the detection of radiation that is readily available and practical for use by the unskilled person.

Widespread use of these simple and easily available detectors could perform a useful function in disseminating knowledge of the effects of radiations. Such knowledge on the part of both adults and school children would eliminate some of the aura of mystery and fear that surrounds the whole subject of radioactivity and the menace it presents. This, in turn, should create some feeling of confidence that would help to avert panic in case of disaster.

The simple instruments described herein could be used effectively by science teachers in our schools and colleges to demonstrate the effects of radiation and the principles of protection in a way that is easily understood. The construction of a simple fluoroscope or gold-leaf electroscope might be an impressive feature of such a teaching project. If the average citizen were to devote a few minutes of his radio or television time each evening to a study of the interesting behavior of a simple gold-leaf electroscope, it would be an important step toward understanding the modern physical world in which he lives; it might be also a means of saving himself and his neighbors in case of imminent danger from radioactive substances.

As the knowledge of the individual increases, and as more attention is given to the problem by experts on radioactive protection, the simple apparatus suggested here could always be replaced by better instruments, such as more complex ionization chambers, Geiger counters or scintillation counters, in case such instruments become available in large-scale editions which the average citizen can afford. Actually, the rudimentary devices described would furnish excellent preparation for the handling of more complex and more precise instruments.

It must be recognized, of course, that the simple indicators suggested here would, at best, give only a rough indication of dangerous radiations. But even

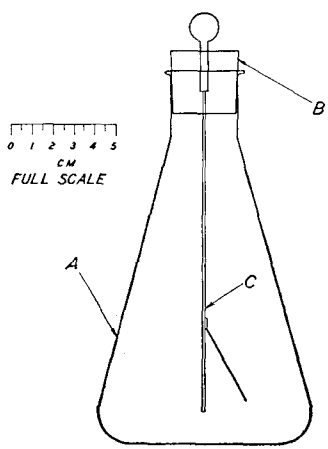

FIG. 3. Simple gold-leaf electroscope. (A) Flask or bottle. (B) Sulfur stopper. (C) Rod with gold leaf.

Downloaded from www.ccjm.org on August 4, 2025. For personal use only. All other uses require permission.

such a rough indication might mean the difference between life and death under certain circumstances. The details of the effects of various types of radiation upon the photographic plate, the fluorescent screen and the ionizing air volume are manifold and must be carefully studied before any precise evaluation of the reacting meter can be made. These details are amply described in the literature on radiology, and application of this detailed knowledge must remain in the hands of the experts.[5,6]

Nevertheless, in case of widespread disaster either by use of the atomic bomb or the dissemination of radioactive materials, the simple devices suggested herein would give extremely valuable information as to the presence or absence of radioactivity and, to a certain degree, could furnish quantitative data regarding the radiation encountered. A community of citizens instructed in their use would be afforded much more adequate protection in case of sudden danger than is available anywhere at present.

References

1. Lauritsen, C. C. and Lauritsen, T.: Radiation meter for disaster use. Science **112**:137 (Aug. 4) 1950.
2. For example: The effects of Atomic Weapons. Washington, D. C., The Combat Forces Press, 1950.
3. Glasser, O.: Evolution of dosimeters in roentgen ray therapy. Radiology **37**:221 (Aug.) 1941.
4. Science Digest **28**:94 (Sept.) 1950.
5. For example: Glasser, O. (Editor): Medical Physics, vol. 1, 1944; vol. 2, 1950, Chicago, Year Book Publishers.
6. Glasser, O., Quimby, E. H., Taylor, L. S. and Weatherwax, J. L.: Physical Foundations of Radiology. New York, Paul B. Hoeber, 1944.

Downloaded from www.ccjm.org on August 4, 2025. For personal use only. All other uses require permission.